LACELA

Product: Cordless Drill Art. No. D211208

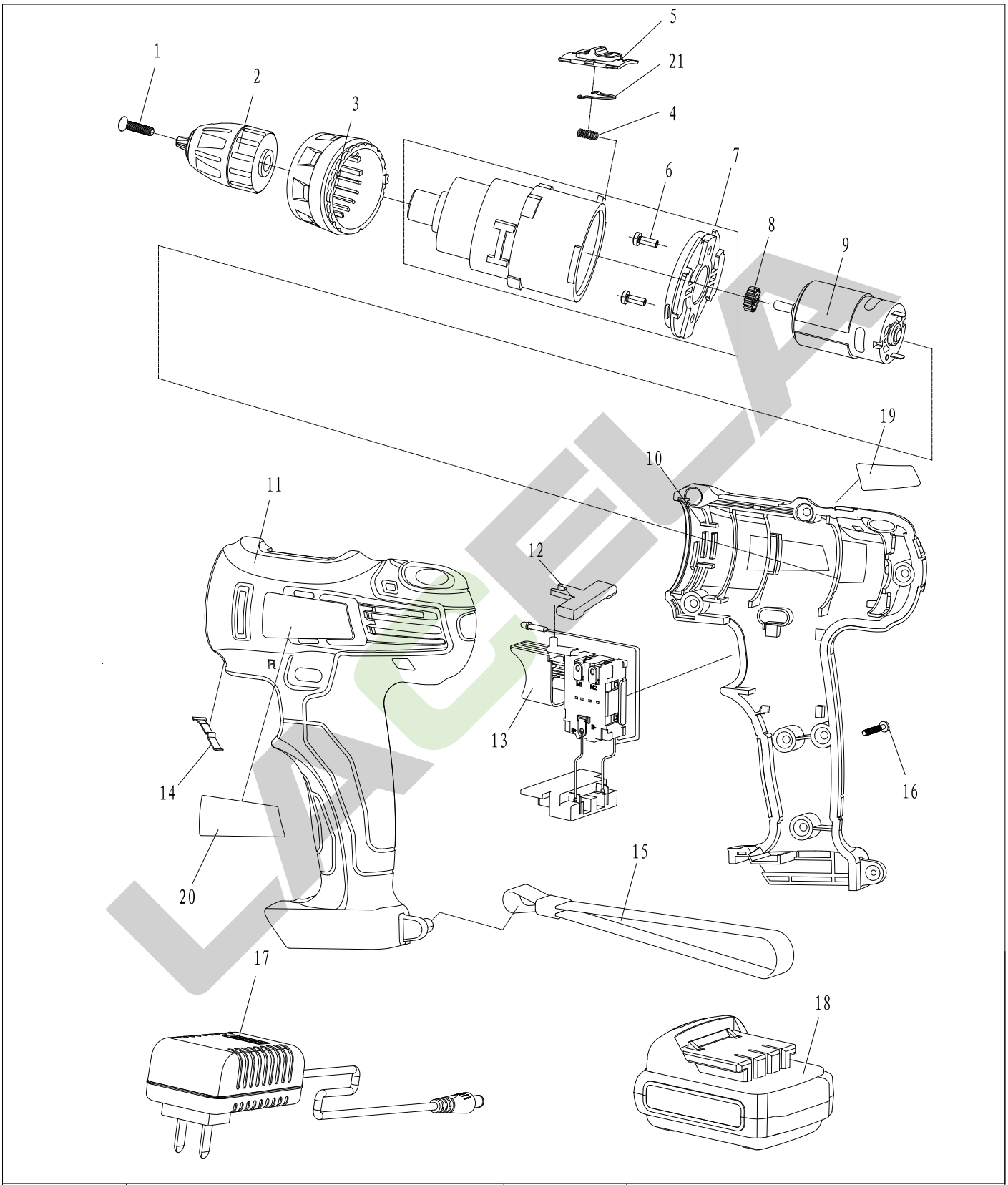

Version No.	D	Enable Time	2022.9

LACELA

Product:Cordless Drill Art.No.D211208

No.	Part Name(Chinese)	Part Name(English)	Code	Qty	No.	Part Name(Chinese)	Part Name(English)	Code	Qty
1	螺钉M5×20-LH	Screw M5×20-LH	30201073	1					
2	钻夹头	Chuck	10304001063	1					
3	扭力杯	Torque Adjusting Ring	10101011238	1					
4	档位弹簧	Gear Push Spring	10303001135	1					
5	档位推钮	Gear Push Button	10101007194	1					
6	带平弹垫螺钉M3×6	Screw M3×6	30201163	2					
7	变速箱组件	Gear Box Complete	10701015052	1					
8	电机齿轮	Motor Gear	10302004167	1					
9	电机	Motor	10608002056	1					
10	右机壳	Left Housing	10101002145	1					
11	左机壳	Right Housing	10101002146	1					
12	换向推杆	Reversing Push Rod	10101007140	1					
13	开关组件	Switch Assembly	10608002011	1					
14	T型弹片	T-Shrapnel	10401003046	1					
15	挂绳	Sling	212010053	1					
16	自攻螺钉ST3×14	Screw ST3×14	30202097	8					
17	CD1210充电器	Charger CD1210	56102009	1					
18	LD1215电池包	Bettery LD1215	56101100	1					
19	铭牌	Name Plate	20302007460	1					
20	商标	Trademark	20402007079	1					
21	档位推钮卡簧	Gear Push Circlip	30303037	1					
Version No.		D			Enable Time		2022.9		

LACELA